0 603 275 003
Stand ~~99-07~~
Issue 00-01-24

Fig./Abb. 1

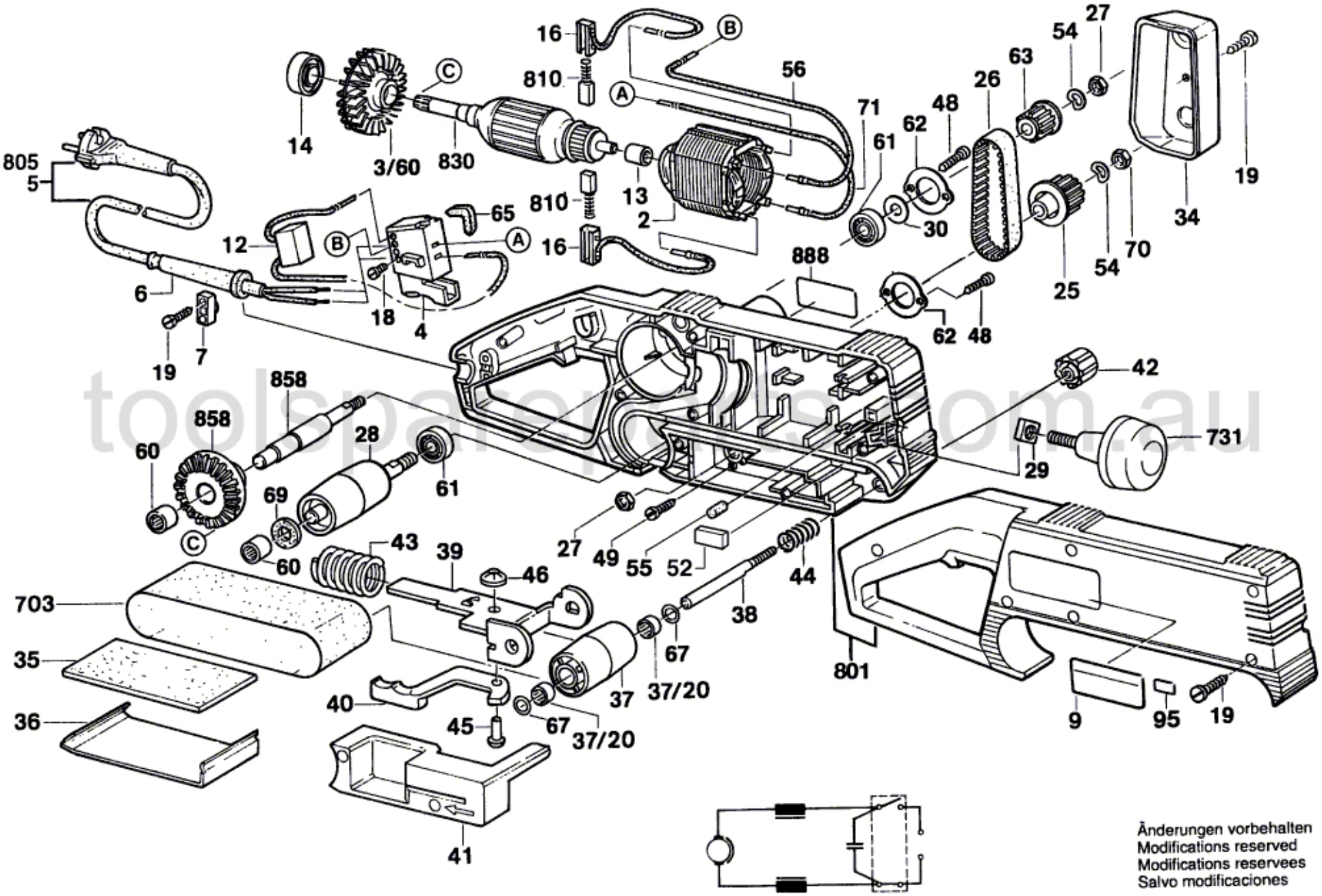

Änderungen vorbehalten
Modifications reserved
Modifications reservees
Salvo modificaciones

toolspareparts.com.au